RENON

Technical Agreement

R-SS03S63003/R-SS06G200003/R-SS12G400003-US

Smart Transfer Switch Cabinet (STS)

2026 1ST EDITION

© Renon Power USA LLC.
All rights reserved. Specifications are subject to change without notice.

E-mail: support@renon-usa.com

Buyer:

_____

Supplier:

_____

_____

Renon Power

We Care About Sustainability

With our own R&D team and automatic production factory, we are dedicated to delivering innovative, reliable, and affordable energy storage solutions to global customers.

At Renon, we believe that sustainable energy is the future. We are passionate about reducing carbon emissions and preserving our planet for future generations. That's why we invest heavily in research and development, leveraging the latest technologies to design and manufacture energy storage systems that are efficient, scalable, and adaptable.

Our products are designed to meet the needs of a wide range of applications, from residential and commercial buildings to industrial facilities and utility-scale projects. Whether you're looking to reduce your energy bills, increase your energy independence, or support your sustainability goals, Renon has the right solution for you.

Our commitment to quality and customer satisfaction is unwavering. We work closely with our clients to understand their unique needs and provide customized solutions that meet or exceed their expectations. We also provide comprehensive technical support, maintenance, and warranty services to ensure that our customers get the most out of their investment.

Join us on our mission to make renewable energy within reach.

PROVIDE INNOVATIVE, RELIABLE, AND AFFORDABLE ENERGY STORAGE SOLUTIONS TO CUSTOMERS WORLDWIDE.

Renewable · Reliable · Remarkable

CONTENTS

1.GENERAL PART ..... - 1 -

1.1 SCOPE OF SUPPLY BY THE SUPPLIER ..... - 1 -

1.2 WORK OF THE PROJECT SITE PERFORMED BY THE BUYER ..... - 2 -

1.2.1 Transportation, Lifting & Installation ..... - 2 -

1.2.2 Electrical Connections ..... - 2 -

1.2.3 Commissioning Support ..... - 2 -

1.3 BUYER'S RESPONSIBILITY FOR SITE PREPARATION ..... - 2 -

1.4 OTHER SITE-SPECIFIC REQUIREMENTS ..... - 2 -

2.TERMS AND DEFINITIONS ..... - 3 -

2.1 MPACK 261A ..... - 3 -

2.2 POWER CONVERSION SYSTEM (PCS) ..... - 3 -

2.3 ENERGY MANAGEMENT SYSTEM (EMS) ..... - 3 -

2.4 ON-GRID & OFF-GRID MODE ..... - 3 -

2.5 UNINTERRUPTIBLE POWER SUPPLY SYSTEM (UPS) ..... - 3 -

2.6 INDUSTRIAL ETHERNET SWITCH (IES) ..... - 3 -

2.7 AUTOMATIC TRANSFER SWITCH (ATS) ..... - 3 -

2.8 SOLID-STATE TRANSFER SWITCH (STS) ..... - 4 -

2.9 MINIATURE CIRCUIT BREAKER (MCB) ..... - 4 -

2.10 U2 CONTROL BOX ..... - 4 -

2.11 AUXILIARY POWER TRANSFORMER ..... - 4 -

2.12 CRITICAL LOAD ..... - 4 -

2.13 STATE OF CHARGE(SOC) & STATE OF HEALTH(SOH) ..... - 4 -

2.14 COMMUNICATION AND CONTROL INTERFACE ..... - 4 -

3.TECHNICAL REQUIREMENTS ..... - 5 -

3.1 TECHNICAL PARAMETER ..... - 5 -

3.2 OPERATION CONDITION ..... - 5 -

3.2.1 Transportation and Handling Requirements ..... *- 6 -*

3.3 THE STRUCTURE ..... - 6 -

3.3.1 R-SS03S63003-US ..... *- 6 -*

3.3.2 R-SS06G200003-US ..... *- 7 -*

3.3.3 R-SS12G400003-US ..... *- 7 -*

3.4 THE APPLICATION TOPOLOGY ..... - 8 -

3.5 ELECTRICAL SCHEMATIC DIAGRAM ..... - 8 -

3.5.1 R-SS03S63003-US ..... *- 9 -*

3.5.2 R-SS06G200003-US ..... *- 10 -*

3.5.3 R-SS12G400003-US ..... *- 11 -*

3.6 EXTERNAL INTERFACES ..... - 12 -

3.6.1 Interface for Grid/Generator Connection ..... *- 12 -*

3.6.2 Interface for Load Connection ..... *- 12 -*

3.6.3 Interface for PV Connection ..... *- 12 -*

3.6.4 Interface for Battery Connection ..... *- 13 -*

3.6.5 Interface for Auxiliary Power Transformer Connection ..... *- 13 -*

3.6.6 Grounding Interface ..... *- 13 -*

3.6.7 Communication and Control Interface ..... *- 14 -*

3.7 INSTALLATION SITE ENVIRONMENTAL REQUIREMENTS ..... - 14 -

3.7.1 Site Selection Considerations ..... *- 14 -*

3.7.2 Installation and Spacing Requirements ..... *- 15 -*

4. EMS CONTROL ..... - 15 -

5.REVISION TABLE ..... - 16 -

1.General Part

This Technical Agreement applies to the RENON Smart Transfer Switch cabinet **(Product Model: R-SS03S63003/R-SS06G200003/R-SS12G400003-US),** hereinafter referred to as "STS cabinet". This document defines the technical specifications, scope of supply, and division of responsibilities between the Buyer and the Supplier for the STS Cabinet.

The Agreement specifically outlines:

- Product specifications, including technical parameters, system functionality, and performance.
- Scope of supply detailing provided equipment, components, and accessories.
- Clear delineation of responsibilities between the Supplier and the Buyer.

This agreement shall be mutually reviewed, confirmed, and agreed upon by both parties prior to finalizing the order. Issues not explicitly addressed herein will be resolved through mutual consultation and supplementary documentation.

1.1 Scope of Supply by the Supplier

The Supplier shall provide the following equipment:

Equipment	Description	Quantity
STS cabinet	Integrated the solid-state transfer switch, EMS, protection components, and auxiliary components into the cabinet to enable fast on-grid/off-grid transfer, intelligent power source coordination, and reliable microgrid operation.	1 set

The STS cabinet is available in standard configurations for parallel connection of MPack 261A ESS units. Model selection is determined by the number of MPack 261A cabinets in the system, as shown in the table below. Available configurations include:

No.	Model	Configuration
1	R-SS03S63003-US	Suitable for parallel systems of up to 3 MPack 261A ESS
2	R-SS06G200003-US	Suitable for parallel systems of up to 6 MPack 261A ESS
3	R-SS12G400003-US	Suitable for parallel systems of up to 12 MPack 261A ESS

Notes: *Any additional equipment required for integration with external systems shall be provided by the Buyer unless otherwise specified.*

1.2 Work of the Project Site Performed by the Buyer

The Buyer is responsible for the following tasks at the project site:

1.2.1 Transportation, Lifting & Installation

- Receiving, unloading, and moving equipment from delivery point to final installation location.
- Lifting, positioning, and securing each cabinet onto prepared foundations.
- Using appropriate lifting equipment (forklift or crane) in accordance with safety standards.

1.2.2 Electrical Connections

- Connecting the cables in accordance with Supplier's wiring diagrams.
- Establishing system grounding with a resistance of ≤1 Ω and complying with local electrical codes.

1.2.3 Commissioning Support

- Providing external power (if needed) and stable network connectivity (≥4 Mbps) for remote monitoring.
- Cooperating with Supplier's engineers during system debugging, testing, and final handover.
- Ensuring the control feasibility of the equipment supplied by the Buyer.

1.3 Buyer's Responsibility for Site Preparation

The Buyer shall ensure the following before delivery of equipment:

- Foundations are level, reinforced, and capable of supporting the full operational weight of all equipment (including seismic considerations if required by local code).
- Adequate space is reserved for equipment layout, clearances, and maintenance access as specified in Section 3.7.2.
- Proper drainage is implemented to prevent water pooling under or around any cabinet or transformer.
- If the installation site exceeds specified environmental conditions (e.g., high dust, salt spray, corrosive gases), the Buyer must install additional protective measures (e.g., shelters, anti- corrosion coatings, forced ventilation).
- All necessary local permits, utility approvals, and inspections are obtained.

1.4 Other Site-Specific Requirements

- Compliance with local regulations, safety codes, and grid connection standards.
- Any additional work not specified in the Supplier's scope shall be performed by the Buyer.

Notes:

- The Supplier will provide technical support and software debugging during commissioning, but the Buyer must ensure that all necessary site conditions are met before testing.
- Any additional installation requirements shall be agreed upon separately.

2.Terms and Definitions

2.1 MPack 261A

A 261kWh/135kW lithium iron phosphate ($LiFePO_4$) battery energy storage cabinet, including battery system, PCS, EMS, BMS, liquid cooling system, and fire suppression system. It's serving as the ESS unit associated with the STS Cabinet under this Agreement. Model: R-MP261135A1-US.

2.2 Power Conversion System (PCS)

A bi-directional inverter within MPack 261A that converts **DC power from the battery to AC power** for external use and vice versa.

2.3 Energy Management System (EMS)

A system (local and cloud- based) that enables real- time monitoring, control, and optimization of the BESS. Supports Modbus TCP/IP, remote dispatch, and configurable charge/discharge strategies.

2.4 On-Grid & Off-Grid Mode

- **On-Grid Mode:** The cabinet operates while connected to the power grid, supporting grid stability and energy management.
- **Off-Grid Mode:** The cabinet functions independently of the grid, supplying power to isolated loads when the grid is unavailable.

2.5 Uninterruptible Power Supply System (UPS)

An uninterruptible power supply device. In the event of a mains power failure, the control module of the battery energy storage system (BESS) can draw power from the UPS to ensure continuous operation of the control module.

2.6 Industrial Ethernet Switch (IES)

An industrial-grade network switch enabling reliable, high-speed communication between EMS units, PCS, BMS, charging modules, and remote/cloud interfaces in the STS cabinet.

2.7 Automatic Transfer Switch (ATS)

ATS refers to the automatic transfer switch used for automatic switching between different power sources.

2.8 Solid-state Transfer Switch (STS)

A hybrid solid-state seamless transfer switch for on/off-grid applications combines low-voltage fast electromagnetic drive technology with semiconductor solid-state arc quenching. It offers rapid disconnection (≤20 ms), high time-consistency with low deviation, and exceptional reliability.

2.9 Miniature Circuit Breaker (MCB)

Compact overcurrent protection device for short-circuit and overload protection in low-voltage circuits.

2.10 U2 Control Box

U2 Control Box refers to the control unit installed in the STS Cabinet for system control and coordination.

2.11 Auxiliary Power Transformer

Auxiliary Power Transformer refers to the user-supplied external transformer used to provide low-voltage auxiliary power for internal auxiliary equipment of the STS Cabinet, such as UPS and air conditioner.

2.12 Critical Load

Critical Load refers to the load that must maintain continuous power supply in the event of utility abnormality or outage. In this system, such load is supported through the STS Cabinet's on-grid/off-grid transfer capability and off-grid operating capability.

2.13 State of Charge(SOC) & State of Health(SOH)

- **SOC** refers to the remaining available energy level of the battery system.
- **SOH** refers to the health status of the battery system compared with its original condition.

2.14 Communication and Control Interface

Ports and protocols supporting monitoring and control:

- LAN (Ethernet): Modbus TCP/IP for remote monitoring and dispatch.
- RS485: For external device integration (e.g., meters, PV inverters).
- CAN: For internal BMS communication.
- Digital Input /Digital Output (DI/DO): For external control signals and status feedback.

3.Technical Requirements

3.1 Technical Parameter

The STS cabinet is used in the MPack 261A **low-voltage AC on-grid/off-grid system** to perform on-grid/off-grid transfer and to support the integration of external power sources such as **generators and PV**. In the event of a grid outage, the STS cabinet enables rapid transfer to off-grid mode to maintain power supply to critical loads. In off-grid operation, the STS cabinet functions as the **microgrid master unit**, coordinating the operation of the battery, generator, PV, and load.

Project	R-SS03S63003-US	R-SS06G200003-US	R-SS12G400003-US
Max. Battery Cabinet Quantity	3	6	12
Battery Capacity (kWh)	n *261 (n≤3)	n *261 (n≤6)	n *261 (n≤12)
Input Voltage (V.ac)	480	480	480
Max. Grid Side Current (A)	1000	2000	4000
Max. Generator Side Current(A)	1000	2000	4000
Max. Load Side Current (A)	600	1000	2000
Max. Maintenance Bypass Side (A)	600	1000	2000
Max. PV Side Current(A)	600	1200	2500
Dimensions-W×D×H	49.2×57.5×93.5in (1250×1460×2376mm)	92.9×55.3×94.2in (2360×1405×2392mm)	117.8×96.0×102.0in (2991×2438×2591mm)
Communication Interface	RS485, CAN, LAN		
Installation Method	Outdoor floor-mounted		
Protection Rating	IP54		
Noise Level@1m	75dB(A)		

3.2 Operation Condition

To ensure optimal performance, longevity, and safety, the STS Cabinet must be operated and stored under the following conditions:

Parameter	Requirement
Operating Temperature	-22~131°F (-30~55°C)
Storage Temperature Range	-22~131°F (-30~55°C)
Relative Humidity	0 to 95% RH (non-condensing)
Altitude Limit	≤9843ft (3000m)

3.2.1 Transportation and Handling Requirements

To ensure the safety and integrity of the STS Cabinet during transportation, the system must comply with international shipping and handling standards.

Aspect	Requirement
Transportation Mode	Suitable for land and sea transportation
Handling Precautions	Must be transported upright; avoid excessive tilting
Packing Standard	Secured with anti-vibration mounts and shock-absorbing materials
Storage During Transit	-4°F to 113°F(-20°C to 45°C) ,avoid prolonged exposure to extreme heat or moisture
Base Requirements	Level the base with a spirit level and ensure its surface is within 0.2in(5mm) of the floor level.

3.3 The Structure

The internal structure within the STS cabinet is shown clearly in the provided diagram below. Major components and their exact locations have been marked directly on the diagram for easy reference during installation, commissioning, and maintenance.

Product Model	Door panel color	Enclosure color
R-SS03S63003-US	Signal White (RAL 9003)	Light Grey (RAL 7035)
R-SS06G200003-US	Signal White (RAL 9003)	Light Grey (RAL 7035)
R-SS12G400003-US	Light Grey (RAL 7035)	Light Grey (RAL 7035)

**The appearance may vary with product upgrades. The actual shipped version shall prevail.*

3.3.1 R-SS03S63003-US

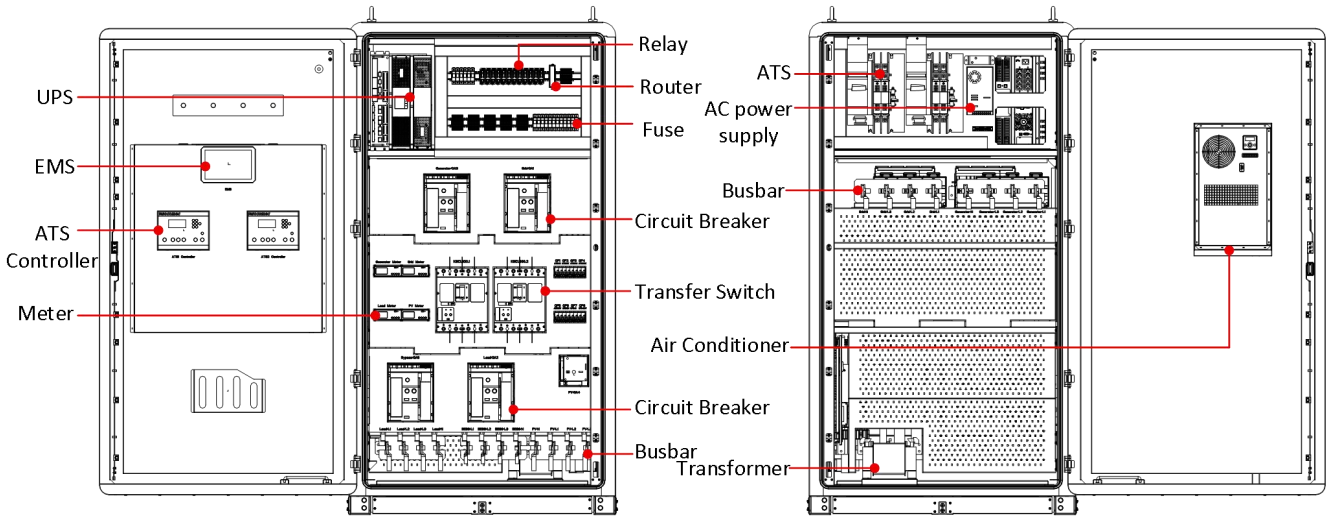

3.3.2 R-SS06G200003-US

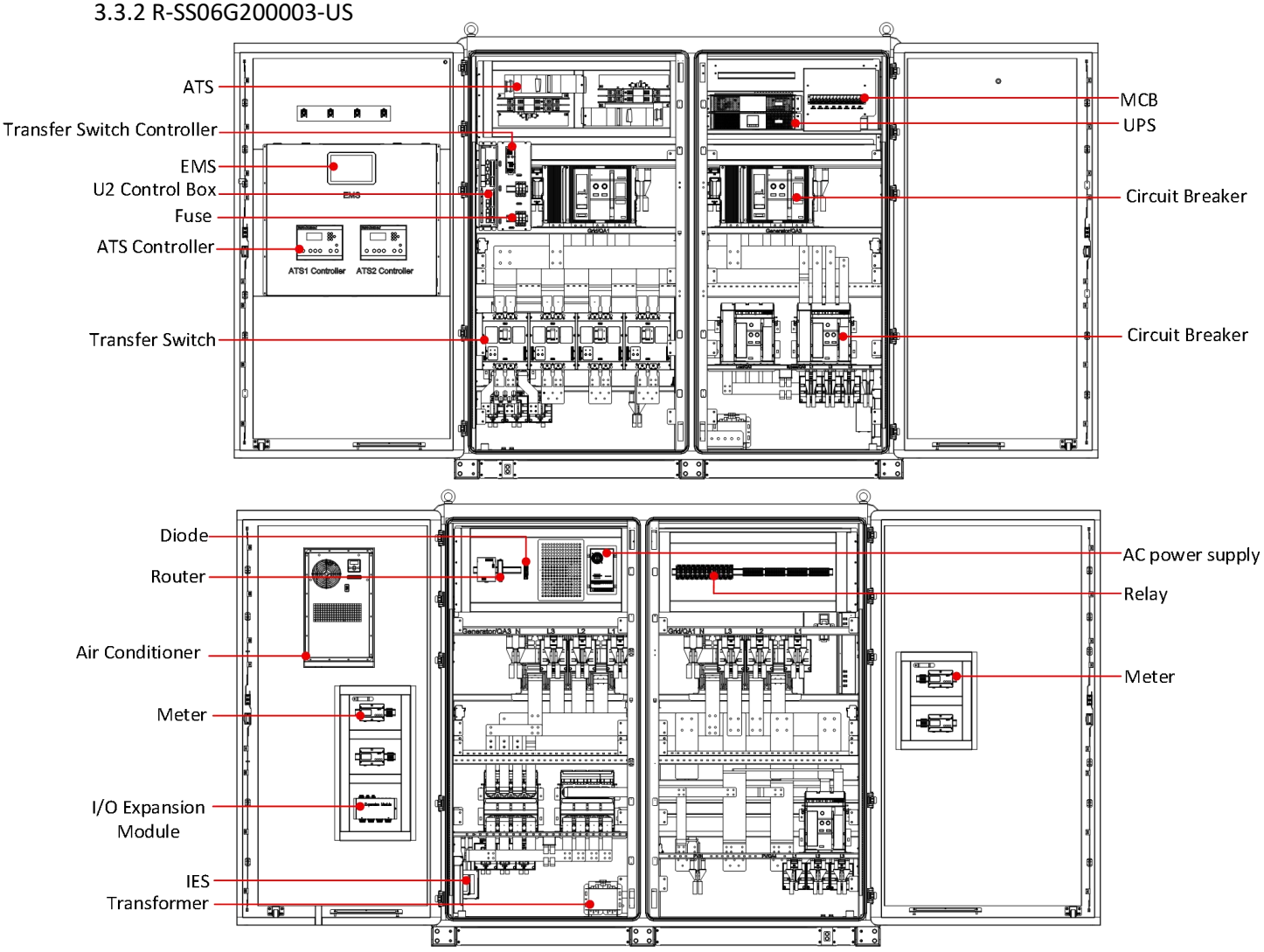

3.3.3 R-SS12G400003-US

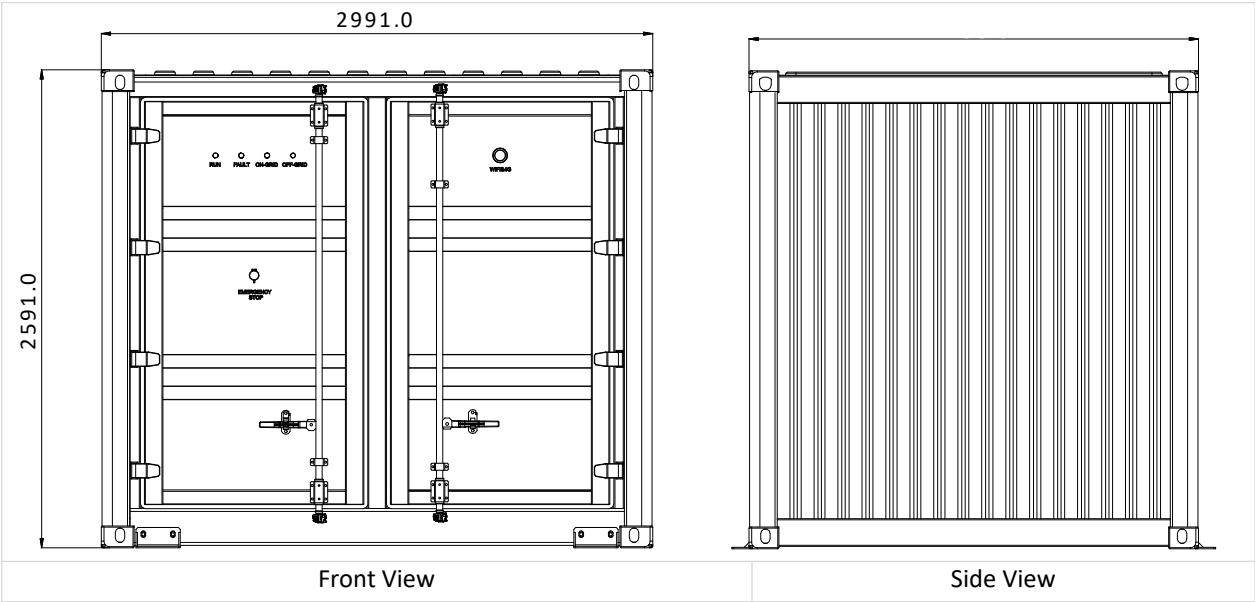

3.4 The Application Topology

The application topology provided clearly demonstrates typical deployment scenarios, including necessary external connections and responsibilities.

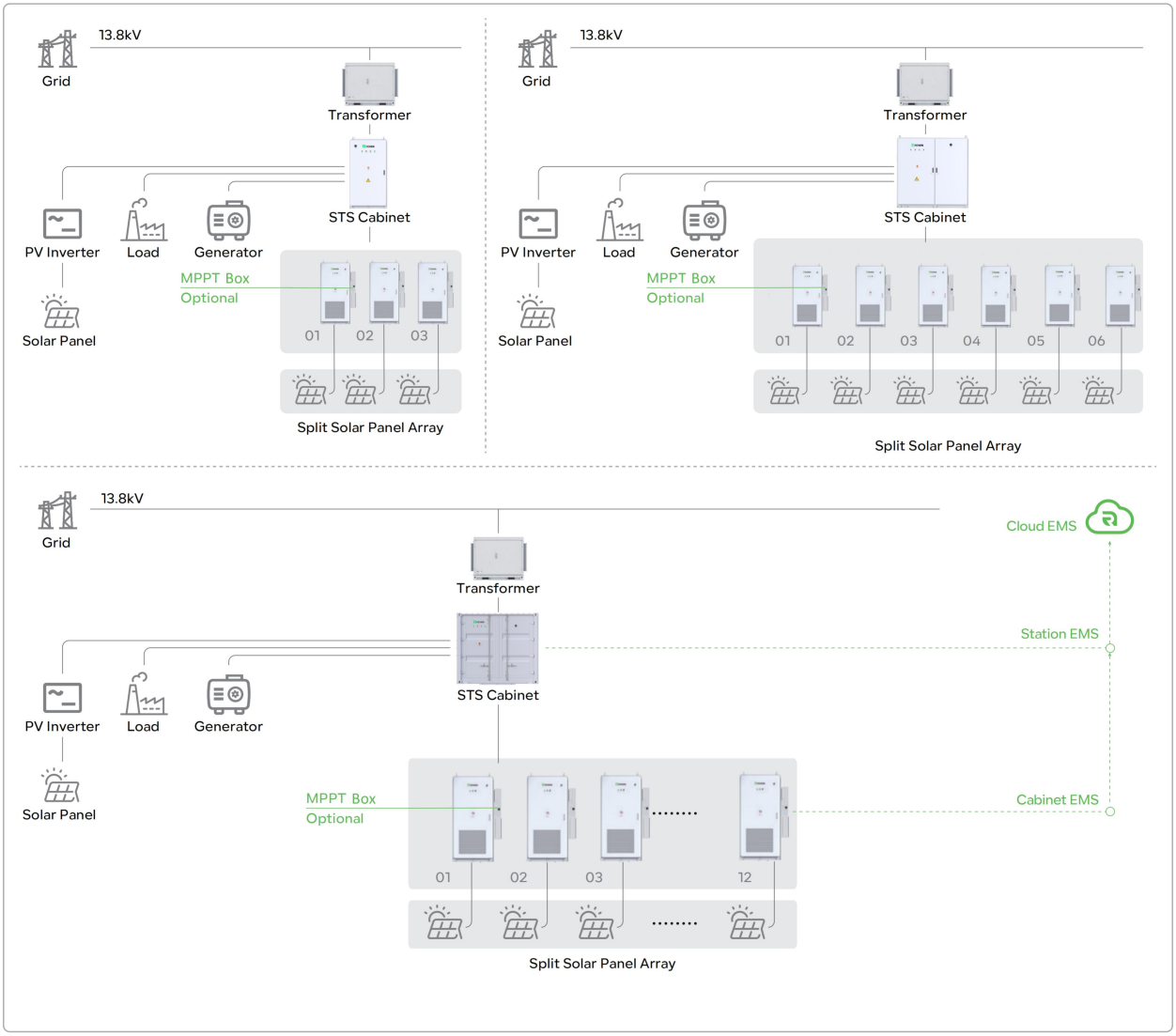

3.5 Electrical Schematic Diagram

The figure below shows the electrical schematic diagram of the STS Cabinet.

3.5.1 R-SS03S63003-US

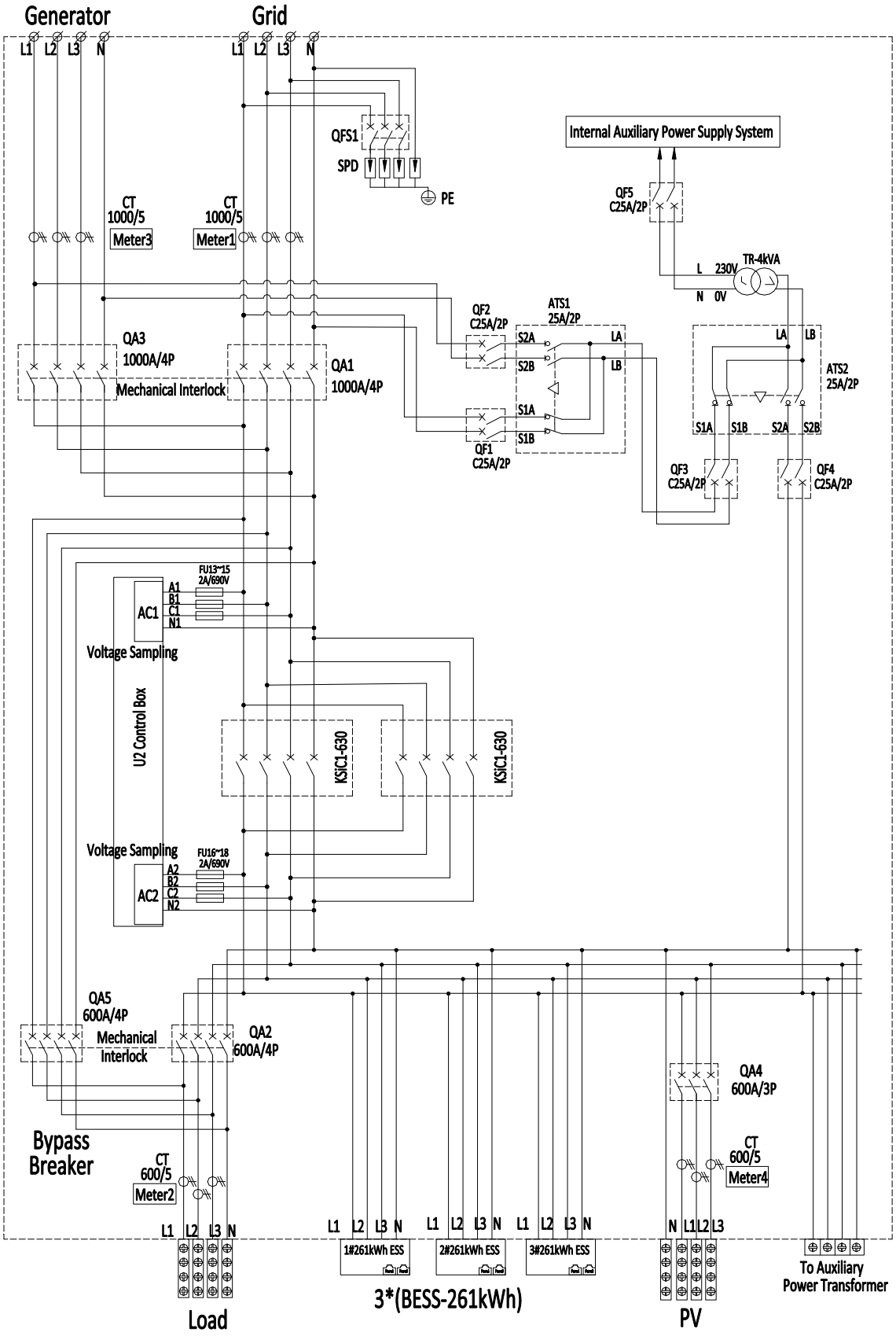

3.5.2 R-SS06G200003-US

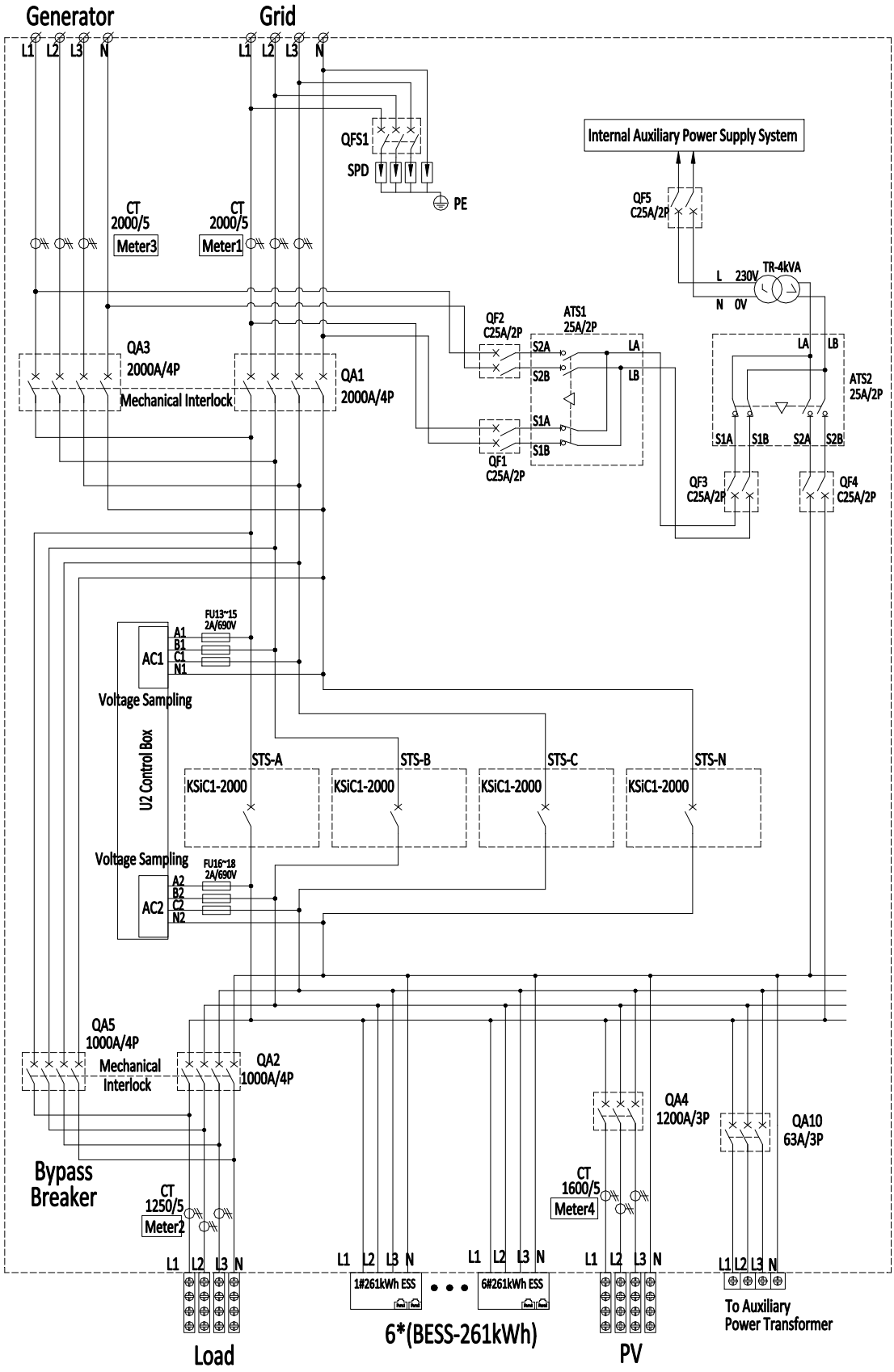

3.5.3 R-SS12G400003-US

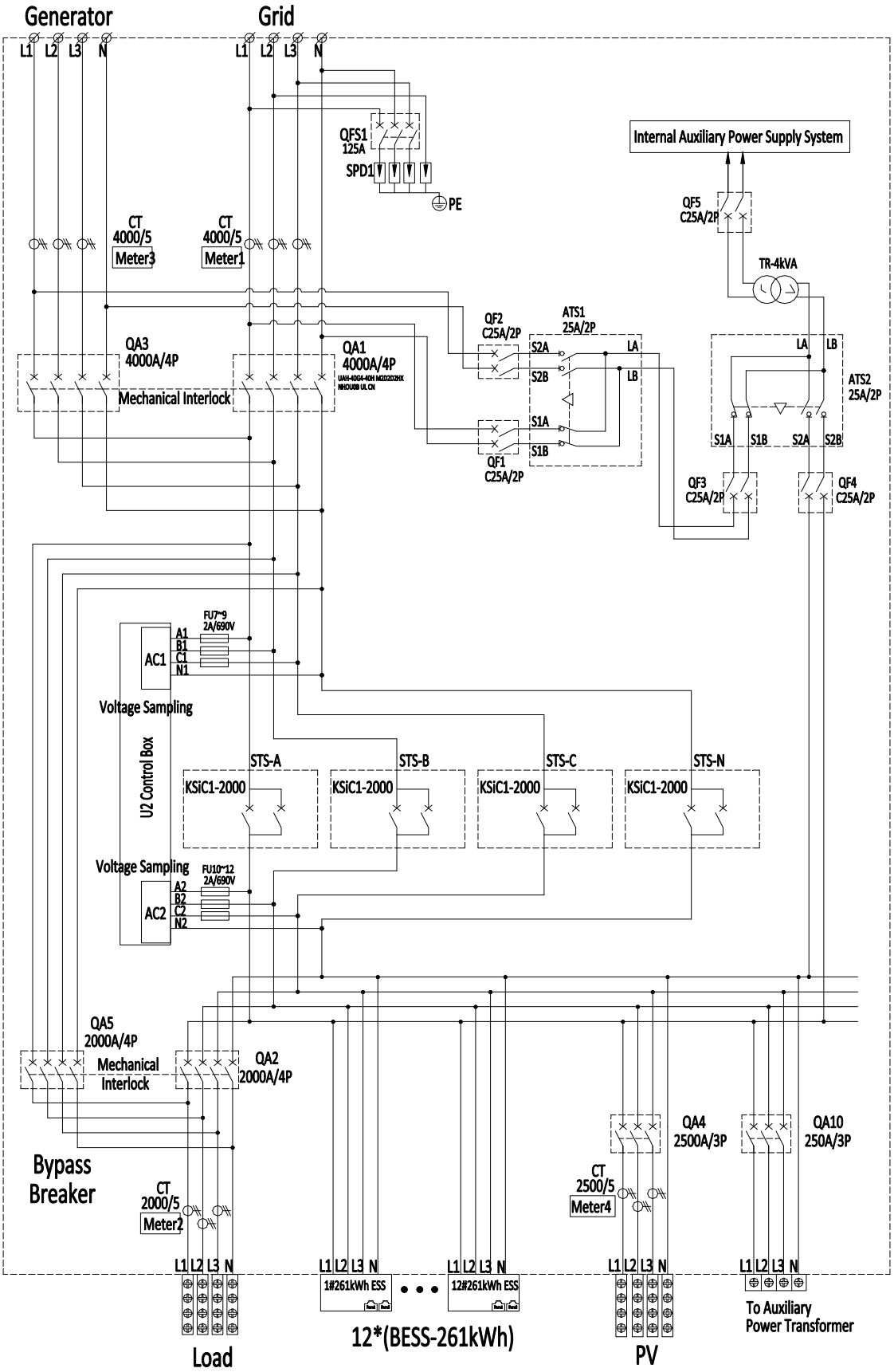

3.6 External Interfaces

This section specifies all external interface requirements and standards of the STS cabinet to ensure seamless and standardized onsite integration. Unless otherwise specified, the cables mentioned in the following sections shall be provided by the Buyer.

The cables listed below are recommended at their minimum sizes. Final confirmation is subject to on-site verification by the Buyer.

3.6.1 Interface for **Grid/Generator** Connection

The interfaces for grid/generator connection are detailed in the table below.

Product Model	Interface Quantity	Description	Recommended Cable	Terminal
R-SS03S63003	1 set each	L1/L2/L3/N	Flame-retardant copper cable; 4x150mm² (300kcmil) per phase	SC150-12
R-SS06G200003			Flame-retardant copper cable; 5x240mm² (500kcmil) per phase	DT240-16
R-SS12G400003			Flame-retardant copper cable; 10x240mm² (500kcmil) per phase	DT240-16

3.6.2 Interface for **Load** Connection

The interfaces for load connection are detailed in the table below.

Product Model	Interface Quantity	Description	Recommended Cable	Terminal
R-SS03S63003	1 set	L1/L2/L3/N	Flame-retardant copper cable; 2x150mm² (300kcmil) per phase	SC150-12
R-SS06G200003			Flame-retardant copper cable; 4x120mm² (250kcmil) per phase	DT120-12
R-SS12G400003			Flame-retardant copper cable; 5x240mm² (500kcmil) per phase	DT240-12

3.6.3 Interface for **PV** Connection

The interfaces for PV connection are detailed in the table below.

Product Model	Interface Quantity	Description	Recommended Cable	Terminal
R-SS03S63003	1 set	L1/L2/L3/N	Flame-retardant copper cable; 2x150mm² (300kcmil) per phase	SC150-12
R-SS06G200003			Flame-retardant copper cable; 4x120mm² (250kcmil) per phase	DT120-12
R-SS12G400003			Flame-retardant copper cable; 6x240mm² (500kcmil) per phase	DT240-12

3.6.4 Interface for **Battery** Connection

The interfaces for battery connection are detailed in the table below.

Product Model	Interface Quantity	Description	Recommended Cable	Terminal
R-SS03S63003	3 sets	L1/L2/L3/N	Flame-retardant copper cable; 1x70mm² (2/0AWG) per phase	SC70-8
R-SS06G200003	6 sets	L1/L2/L3/N	Flame-retardant copper cable; 1x70mm² (2/0AWG) per phase	DT70-8
R-SS12G400003	12 sets	L1/L2/L3/N	Flame-retardant copper cable; 1x70mm² (2/0AWG) per phase	DT70-8

3.6.5 Interface for **Auxiliary Power Transformer** Connection

The interfaces for transformer(Buyer-supplied) connection are detailed in the table below.

Product Model	Interface Quantity	Description	Recommended Cable	Terminal	Transformer Specification
R-SS03S63003	1 set	L1/L2/L3/N	Flame-retardant copper cable; 1x6mm²(10AWG) per phase	RV5.5-6S	Three-phase isolation transformer, 20kVA, 60Hz, 480VΔ/380VY with neutral.
R-SS06G200003			Flame-retardant copper cable; 1x10mm²(8AWG) per phase	SC10-6	Three-phase isolation transformer, 30kVA, 60Hz, 480VΔ/380VY with neutral.
R-SS12G400003			Flame-retardant copper cable; 1x35mm²(2AWG) per phase	SC35-10	Three-phase isolation transformer, 75kVA, 60Hz, 480VΔ/380VY with neutral. (Or optional RENON auxiliary power distribution cabinet.)

3.6.6 **Grounding** Interface

The grounding interfaces in the table below shall be connected to the grounding electrodes (e.g., ground rod or grounding grid).

Product Model	Interface Quantity	Description	Recommended Cable	Terminal
R-SS03S63003	2 sets	One inside the cabinet and one outside the cabinet.	Flame-retardant copper cable, yellow-green insulation; 1x120mm²(250kcmil)	SC120-10
R-SS06G200003			Flame-retardant copper cable, yellow-green insulation; 2x120mm²(250kcmil)	DT120-12
R-SS12G400003			Flame-retardant copper cable, yellow-green insulation; 3x120mm²(250kcmil)	DT120-12

3.6.7 **Communication and Control** Interface

The interfaces for communication connection are detailed in the table below.

External Interface	Quantity	Description
Ethernet (LAN)	2 sets	1) IES#1: Connects to the parallel MPack 261A units. 2) IES#2: Connects to the station EMS/ host computer. Use a Cat.5e cable with an RJ45 connector.
RS485	1 branch circuit	XTEN Terminal Block (Terminal 1-2): reserved
CAN	1 branch circuit	XTEN Terminal Block (Terminal 3-4): reserved
DI/DO	4 branch circuits	XTEN Terminal Block(Terminal 5-12) 1) Terminal 5-6: Dry contact DO for generator start 2) Terminal 7-8: DO, reserved 3)Terminal 9-10: Generator feedback signal input (requires external passive contact) 4) Terminal 11-12: DI, reserved
DC 24V	1 branch circuit	XTEN Terminal Block(Terminal 13-14): Connects to the external DC 24V Input.

Notes:

- The Buyer is responsible for providing stable network connectivity and internet access.
- For any additional external device integration, the Buyer shall take full responsibility for the external wiring and connections. The Supplier's scope of supply is limited to the internal Ethernet wiring within the ESS cabinet.

3.7 Installation Site Environmental Requirements

This section provides essential physical specifications and site installation requirements to ensure smooth onsite planning and installation.

The Buyer must ensure that the installation environment meets the following requirements to ensure the safe and reliable operation of the STS Cabinet.

3.7.1 Site Selection Considerations

the STS Cabinet **must not be installed in the following locations:**

- Areas with high levels of dust, sand, or salt spray, **unless** adequate protective measures are implemented .
- Locations exposed to corrosive gases (e.g., H_2, SO_2) or potentially explosive atmospheres.
- Spaces with insufficient ventilation, as this may lead to component overheating.
- Areas within a straight-line distance of 1.55 miles (2.5 km) from the coastline. If installation within 1.55 miles (2.5 km) of the coastline is unavoidable, consult RENON for a validated technical protection solution.

3.7.2 Installation and Spacing Requirements

- Maintain minimum clearances to ensure proper ventilation and maintenance access.

	R-SS03S63003-US	R-SS06G200003-US	R-SS12G400003-US
Front	≥51.2 in (1300 mm)	≥59.0 in (1500 mm)	≥59.0 in (1500 mm)
Rear	≥51.2 in (1300mm)	≥59.0 in (1500 mm)	≥59.0 in (1500 mm)
Sides	≥3.9 in (100 mm)	≥7.9 in (200 mm)	≥7.9 in (200 mm)

- Installation surface must be flat, stable, and capable of bearing the full operational weight.
- Ensure the site provides adequate drainage and protection from flooding.

4. EMS Control

4.1 Function Overview

The STS cabinet EMS supports coordinated management of multiple MPack 261A energy storage cabinets. Based on the operating status of each storage cabinet, including SOC, SOH, temperature, and available power capability, the EMS dynamically allocates charging and discharging power to optimize system operation and achieve balanced utilization among multiple cabinets.

The EMS supports system status monitoring, power coordination, safety validation, and energy storage cabinet integration management. During on-grid operation, when a single storage cabinet is removed or restored, the EMS can automatically redistribute system power based on the status of the remaining cabinets to maintain stable system operation.

During off-grid operation, the EMS prioritizes system power stability and adjusts the total system output power according to the available capability of the remaining healthy storage cabinets.

4.2 On/Off-Grid Switching

The STS cabinet supports fast on-grid/off-grid switching within 20ms, enabling automatic switching between on-grid and off-grid modes according to grid conditions.

- Under normal grid conditions, the system operates in on-grid mode;
- When grid failure occurs, the system automatically switches to off-grid mode, with the energy storage system supporting the loads;
- When grid power is restored, the system automatically returns to on-grid operation.

The system also supports forced on-grid mode and forced off-grid mode to meet different application requirements.

4.3 EMS Control of Circuit Breakers

The STS cabinet AC side is equipped with circuit breakers for the grid, diesel generator, load, and PV sides. The EMS coordinates the operation of these circuit breakers to achieve system power source

switching and operation management.

The STS switch provides isolation functionality to meet the system safety requirements for electrical isolation points.

5.Revision Table

The document revision history is tracked in the following table:

Revision Number	Date (MM/DD/YYYY)	Description
A01	Aug 10, 2026	Initial version

(Supplier): _____

Representative:

Signature:

Title:

Date:

(Buyer): _____

Representative:

Signature:

Title:

Date:

Technical Support

Email: support@renon-usa.com

Renon Power USA LLC

580 McIntyre Rd. McKinney, TX 75071

Renon Power Technology B.V.

Rietbaan 10, 2908 LP Capelle aan den IJssel

Renon Power 株式会社

東京都中央区日本橋箱崎町 20-5 VORT 箱崎 5F

Linkedin

Website